WINSTONE STEEL

INDUSTRIAL STEELWORK & COMPONENTS

PRODUCT RANGE CATALOGUE | 2026



Winstone Industrial Tech Co., Ltd.

info@winstoneglobal.com | WhatsApp: +86 158 6784 1246

www.winstonesteel.com

AI-generated application concept

Explore the range

12 families · 60 product types



Product / application concept · AI-generated

01 Grating & trench covers 5

02 Perforated safety planks 6

03 Stair treads & components 7

04 Industrial handrail components 8

05 Ladders & access gates 9

06 Steelwork & flooring fixings 10

07 Strut support systems 11

08 Pipe supports & instrument stands 12

09 Connection & embedded plates 13

10 Equipment bases & OEM frames 14

11 Modular access & platforms 15

12 Guarding & specialist steelwork 16

Explore steelwork components for connections, equipment supports and industrial access.

The WINSTONE STEEL story

Connections that support industry



Factory / workshop concept · AI-generated

Industrial work depends on details: the grating underfoot, the maintenance platform beside a machine, the support beneath a pipe and the connections between components. WINSTONE STEEL focuses on the steelwork that brings these everyday applications together.

Our brand is guided by clear product choices, practical structural thinking and coordinated components for access, protection, support and equipment integration. From a connection plate to a modular platform, we focus on how each part fits into the whole.

Our geometric W reflects intersecting steel members. Navy and steel gray express precision and composure; orange draws attention to the details that matter.

Inside the fabrication workflow

A focus on materials, connections and finishes



Factory / workshop concept · AI-generated

From hole positions and dimensions to forming, connections and surface finishes, each fabrication detail relates to the final application.

Process sequence: drawing review, cutting and forming, fit-up and welding, finishing, inspection and packing.

01 Grating & trench covers

Walkways, plant flooring and drainage access.

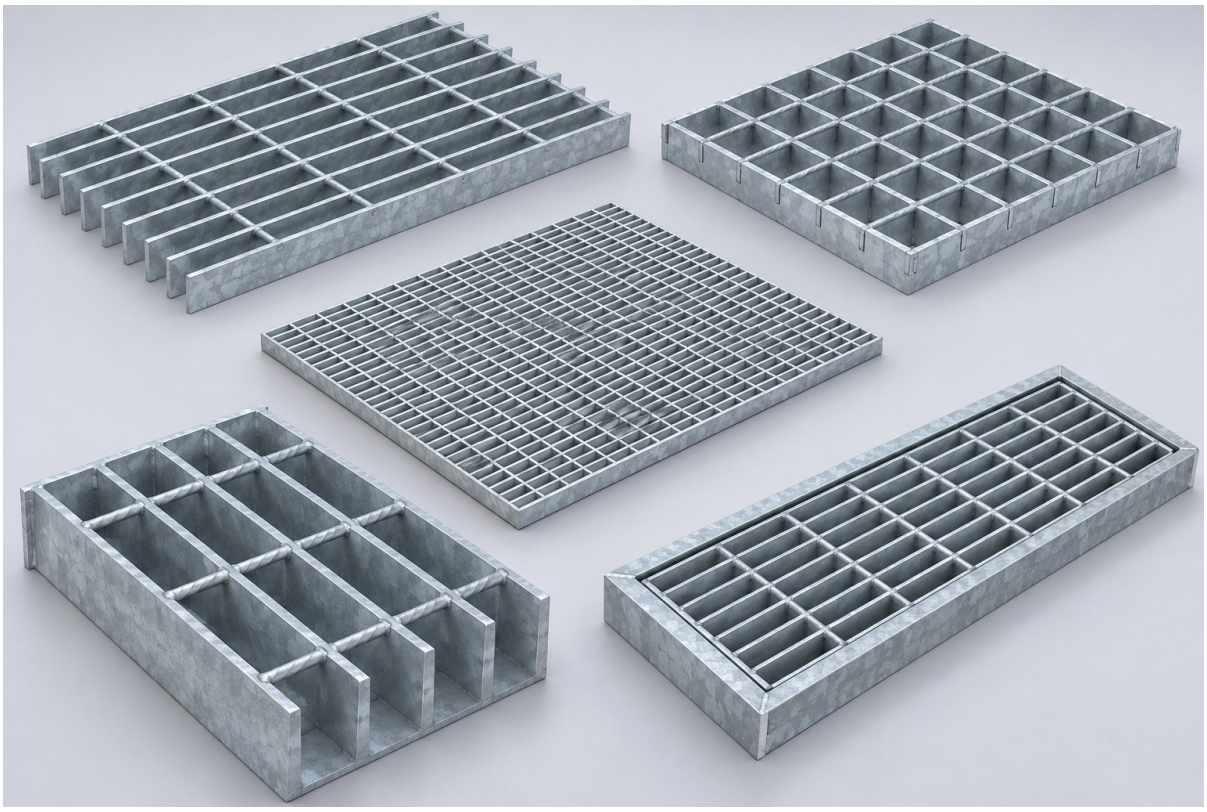

Product / application concept · AI-generated

Welded bar grating

Press-locked grating

Heel-resistant grating

Heavy-duty grating

Trench covers and frames

PRODUCT SELECTION DETAILS

Bearing bar, mesh, panel size, span, edge banding and finish.

02 Perforated safety planks

Industrial footways and equipment access surfaces.

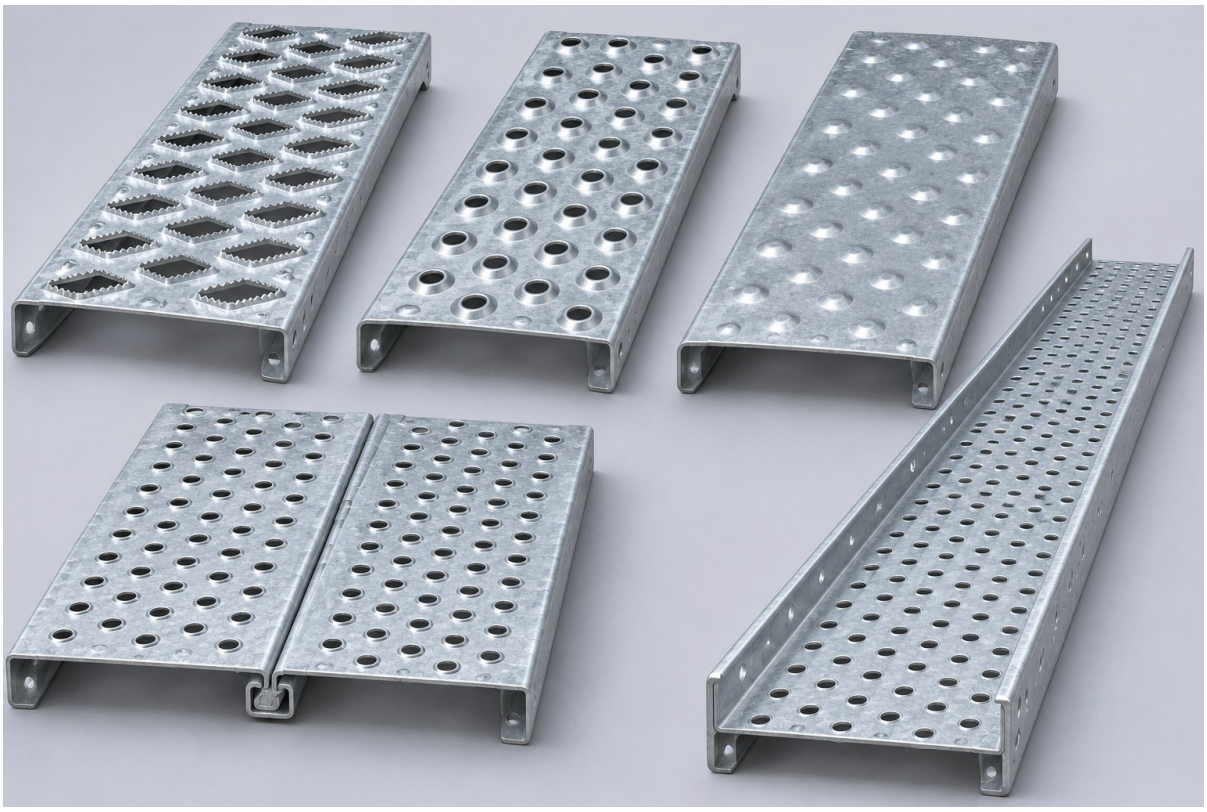

Product / application concept · AI-generated

Serrated diamond safety plank

Raised-round-hole safety plank

Embossed traction plate

Interlocking safety plank

Walkway channel plank

PRODUCT SELECTION DETAILS

Hole pattern, sheet thickness, plank width, length and side profile.

03 Stair treads & components

Stair assemblies and replacement tread components.

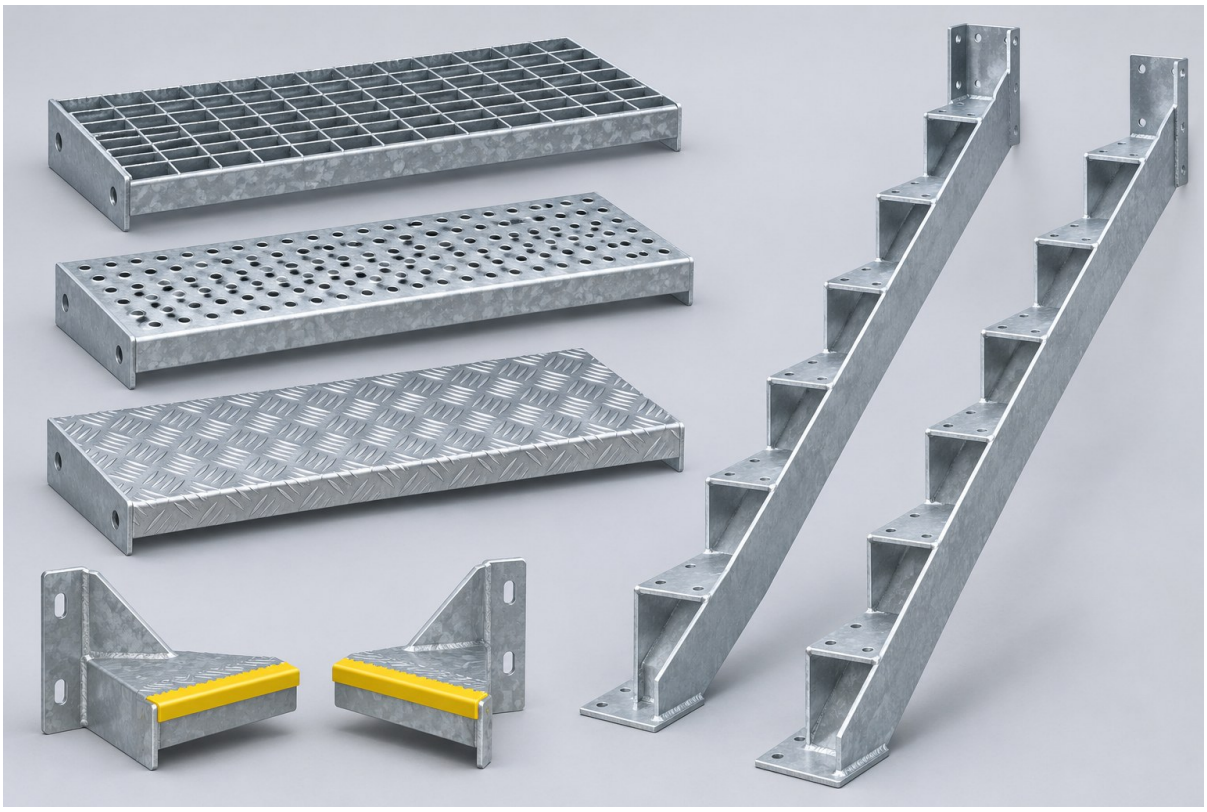

Product / application concept · AI-generated

Bar grating stair tread

Perforated stair tread

Chequer plate stair tread

Tread carrier plates and nosings

Fabricated stair stringers

PRODUCT SELECTION DETAILS

Clear width, tread depth, rise, nosing, fixing holes and support layout.

04 Industrial handrail components

Platform edges, stairs and maintenance access.

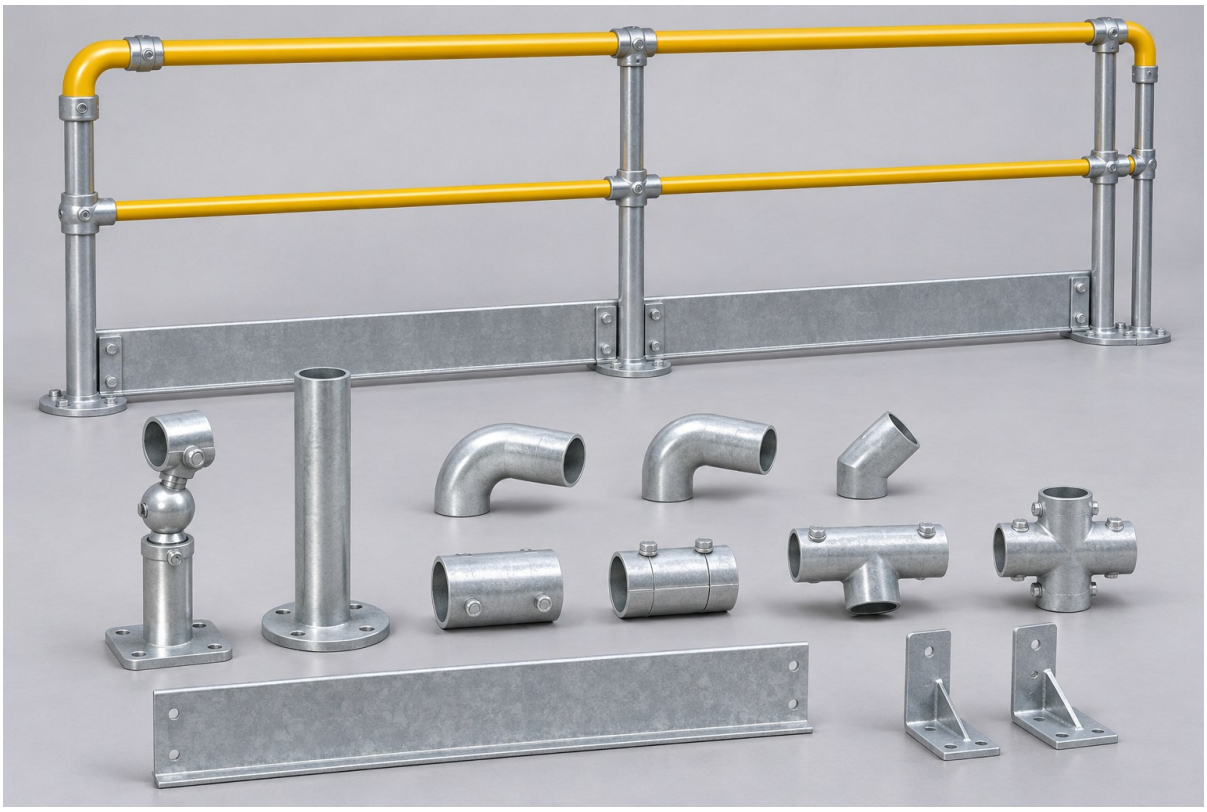

Product / application concept · AI-generated

Ball-joint stanchions

Flange-mounted railing posts

Handrail bends and sleeves

Toe boards and brackets

Tubular railing fittings

PRODUCT SELECTION DETAILS

Tube section, post spacing, mounting method, bends and toe board.

05 Ladders & access gates

Fixed access routes and controlled platform openings.



Product / application concept · AI-generated

Anti-slip ladder rungs

Fixed ladder sections

Ladder brackets and walk-through handholds

Self-closing safety gates

Pallet transfer safety gates

PRODUCT SELECTION DETAILS

Access height, clear opening, fixing points, gate swing and protection needs.

06 Steelwork & flooring fixings

Flooring attachment and steel-to-steel connections.

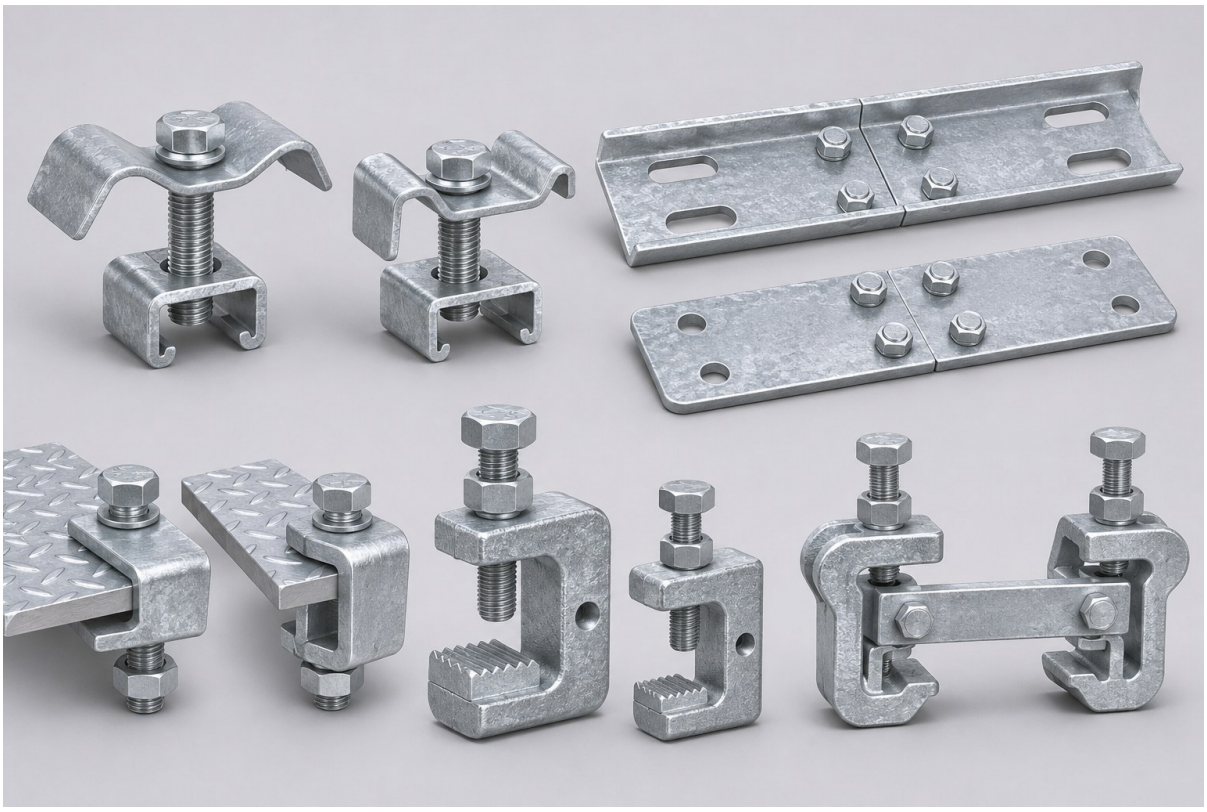

Product / application concept · AI-generated

Grating saddle clips

Safety plank fasteners and splices

Floor plate clamps

Beam clamps for service supports

Structural girder clamp assemblies

PRODUCT SELECTION DETAILS

Connected section, flange thickness, bolt size, load case and assembly detail.

07 Strut support systems

Modular service supports and installation frames.

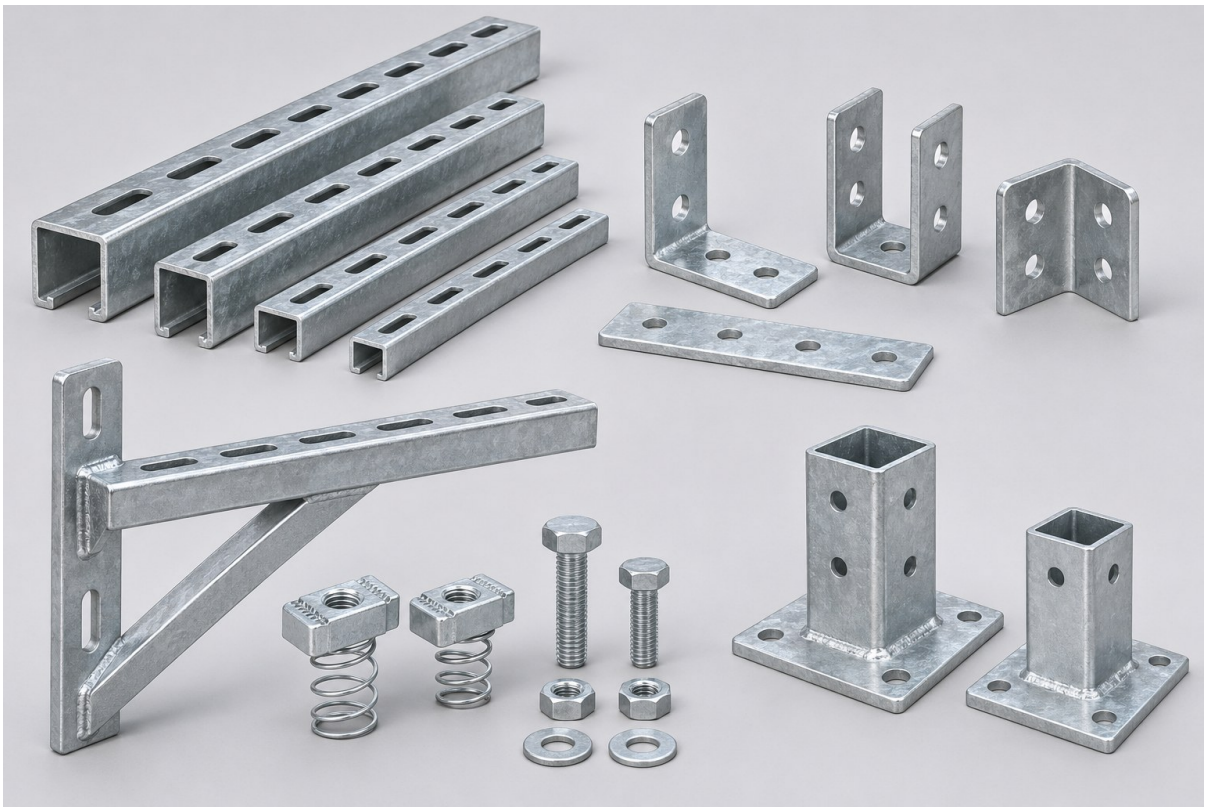

Product / application concept · AI-generated

Strut channels

Flat angle and U fittings

Cantilever support brackets

Channel nuts and hardware kits

Strut post bases

PRODUCT SELECTION DETAILS

Channel section, slot pattern, bracket reach, nut thread and coating.

08 Pipe supports & instrument stands

Rigid pipe support and instrument mounting.

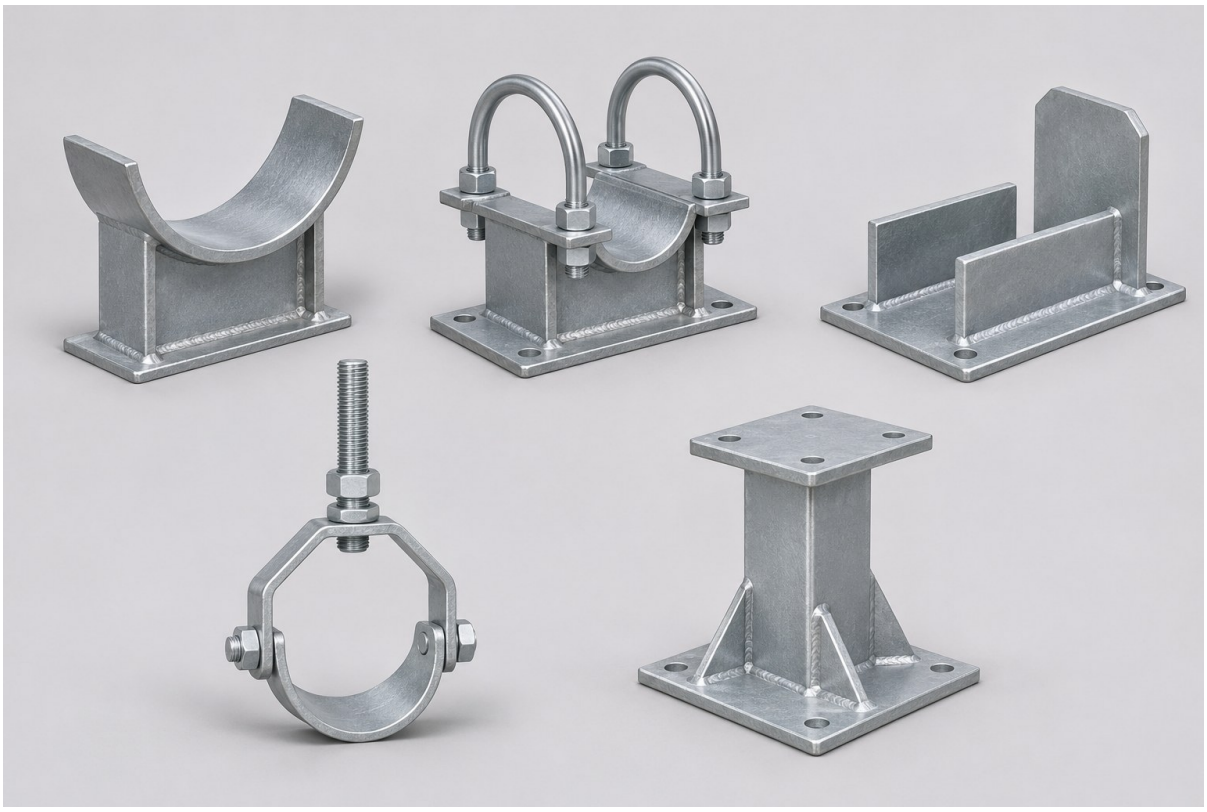

Product / application concept · AI-generated

Weld-on rigid pipe shoes

Clamp-on rigid pipe shoes

Pipe guides and stops

Pipe clamps and clevis hangers

Instrument stands and wall brackets

PRODUCT SELECTION DETAILS

Pipe diameter, support height, movement allowance, load and mounting detail.

09 Connection & embedded plates

Fabricated joints and cast-in connection details.

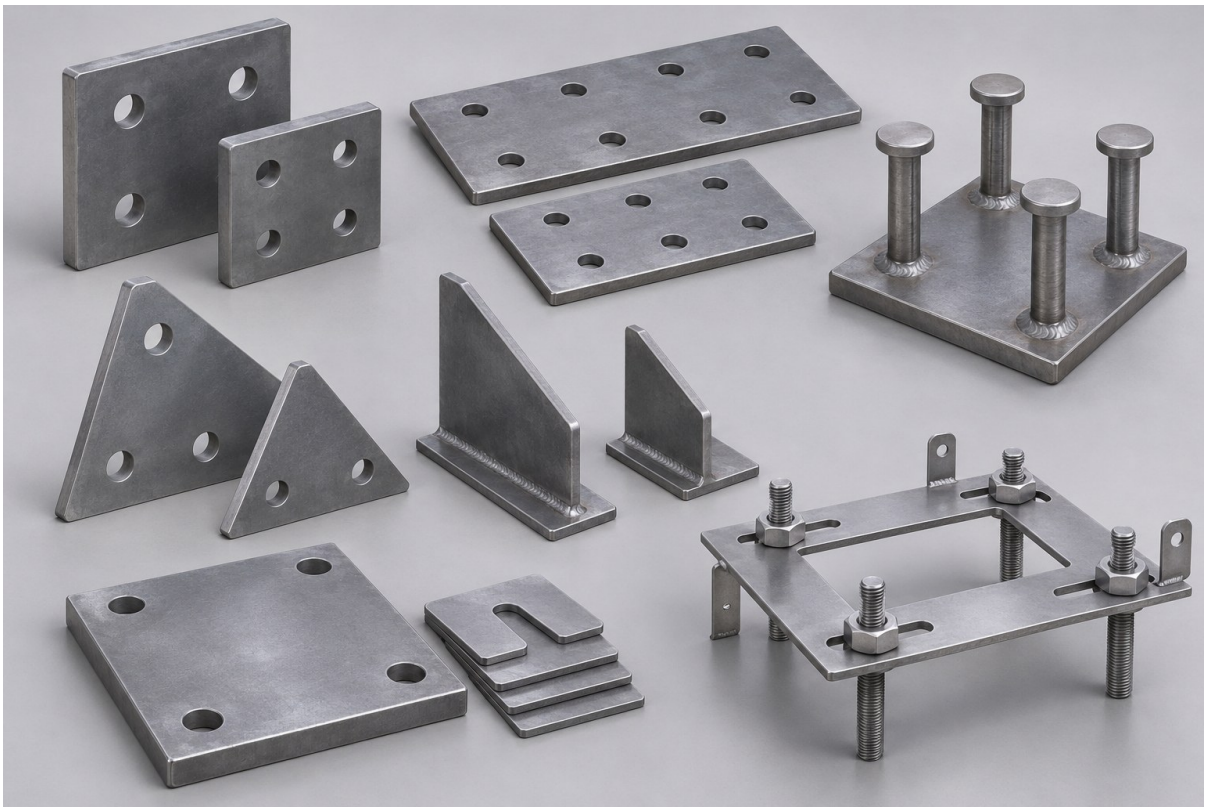

Product / application concept · AI-generated

End plates and splice plates

Gusset and stiffener plates

Base plates and leveling shims

Embedded steel plate assemblies

Anchor bolt setting templates

PRODUCT SELECTION DETAILS

Plate grade, thickness, hole coordinates, weld detail and tolerances.

10 Equipment bases & OEM frames

Equipment integration and drawing-based fabrication.



Product / application concept · AI-generated

Pump base frames

Water-treatment equipment frames

Small skid base frames

Static equipment support frames

Fabricated welded bracket assemblies

PRODUCT SELECTION DETAILS

Equipment envelope, mounting coordinates, operating loads and finish.

11 Modular access & platforms

Maintenance access around industrial equipment.



Product / application concept · AI-generated

Bolted industrial stair flights

Equipment crossover platforms

Valve access platforms

Equipment maintenance platforms

Industrial catwalk modules

PRODUCT SELECTION DETAILS

Site layout, access height, clear width, design loads and anchoring.

12 Guarding & specialist steelwork

Machine segregation and engineered steel interfaces.



Product / application concept · AI-generated

Machine guarding panels and posts

Guarding door frames and hardware

Expanded metal guarding panels

Crane rail soleplates and clips

Primary structural steel packages

PRODUCT SELECTION DETAILS

Protection layout, opening size, interfaces and project-specific engineering.

Define your project

Clear inputs for a focused quotation



Product / application concept · AI-generated

01 Drawings & quantity

Drawing revision, quantity, installation location and component scope.

02 Materials & service

Grade, dimensions, loads, exposure conditions and target market.

03 Inspection & records

Dimensional, weld, coating, traceability and third-party inspection requirements.

04 Packing & delivery

Packing, marking, destination, delivery terms and required date.

Send your drawings, technical requirements and quantities to start your project.

Let’s discuss your project

Send your drawings, specifications and purchasing plan



Product / application concept · AI-generated

Winstone Industrial Tech Co., Ltd.

www.winstonesteel.com

EMAIL

info@winstoneglobal.com

WHATSAPP

+86 158 6784 1246

Room 35A04, Tower A, Ningbo Center,
Yinzhou District, Ningbo, Zhejiang, China